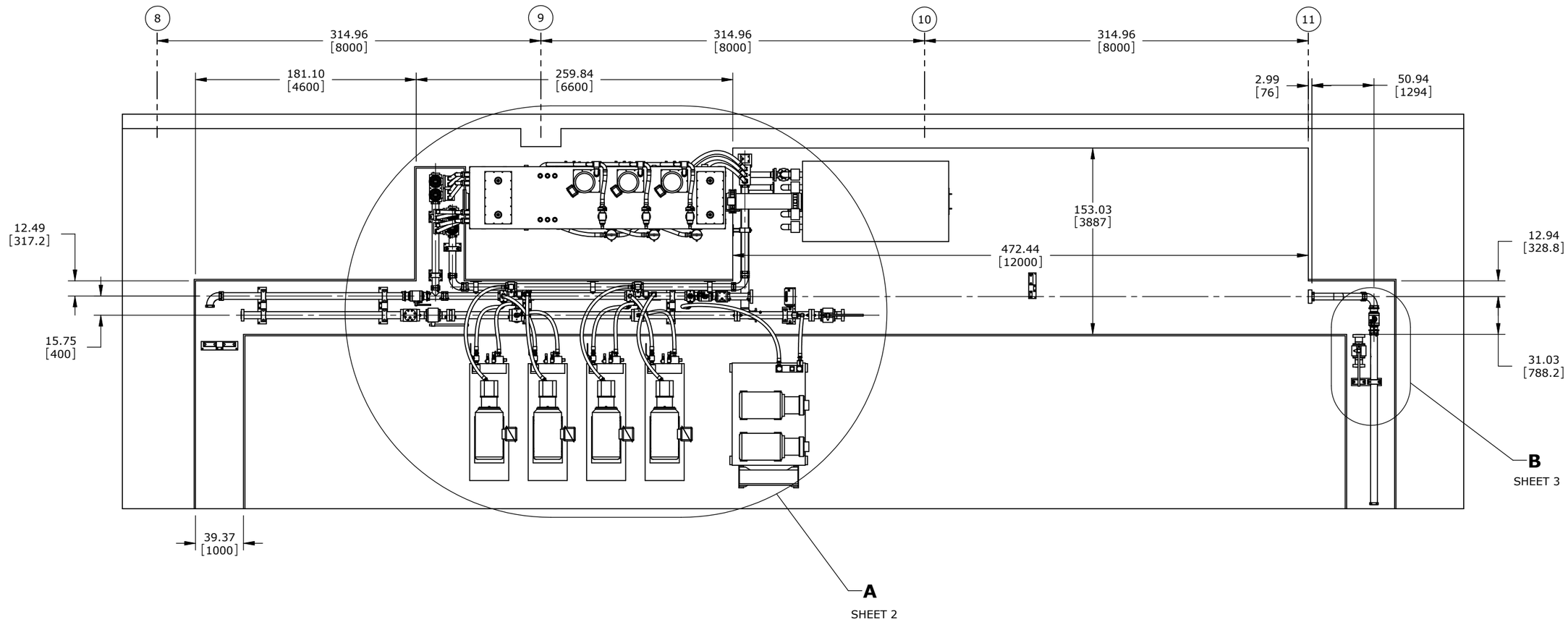

NOTE:

1. LUBE & TORQUE:
   - -1/2-13 TO 60 LBF-FT (81 N-m)
   - -5/8-11 TO 120 LBF-FT (160 N-m)
   - -M16 x 2 TO 130 LBF-FT (170 N-m)
   - -M24 x 3 TO 430 LBF-FT (580 N-m)
2. LUBRICATE ALL SEALS AND O-RINGS PRIOR TO ASSEMBLY.
3. ITEMS NOT SHOWN: 58 THRU 62, AND 90 THRU 103.

REVISIONS

DESCRIPTION			LETTER	ECN NO
DRAWN	ENGR	DATE		

-

SOURCE/REF DRAWING -

PROPRIETARY DATA

THE INFORMATION AND DESIGN(S) DISCLOSED HEREIN ARE CONFIDENTIAL AND THE PROPERTY OF MTS SYSTEMS CORPORATION AND MAY NOT BE USED, REPRODUCED OR DISCLOSED IN ANY FORM EXCEPT AS GRANTED IN WRITING BY MTS SYSTEMS CORPORATION. THIS RESTRICTION EXCLUDES INFORMATION THAT IS IN THE PUBLIC DOMAIN OR WAS LEGITIMATELY IN THE PRIOR POSSESSION OF THE RECIPIENT.

UNLESS OTHERWISE SPECIFIED

MATERIAL DESCRIPTION -----

MATERIAL SIZE -----

FINISH ----- MASK

- THREAD DEPTHS ARE TO MIN FULL THDS
- DRILL DEPTHS ARE TO FULL DIA
- REMOVE BURRS AND SHARP EDGES
- DO NOT SCALE PRINT

SCALE NONE

MACHINED SURFACES 180√

.XXX HOLE SIZE TOLERANCE: 0.000 TO .750 +.010/-.002; OVER .750 TO 1.500 +.015/-.003

GENERAL TOLERANCES: ANGLE ±2°; X/Y ±1/4; .X ±.1; .XX ±.03; .XXX ±.010

THIRD ANGLE PROJ

MTS SYSTEMS CORPORATION
EDEN PRAIRIE, MINNESOTA U.S.A.

DRAWN	CHECK	ENGR	MFG
TLN	-	JHS	-
DATE 7-30-10	DATE -	DATE 7-30-10	DATE -

TITLE
HYDRAULIC DISTR
ASSY-US2.41493.CUS

NEXT LEVEL -----

PRODUCT CODE -----

SIZE D

NUMBER 100-230-522

REV A

SHEET 1 OF 4

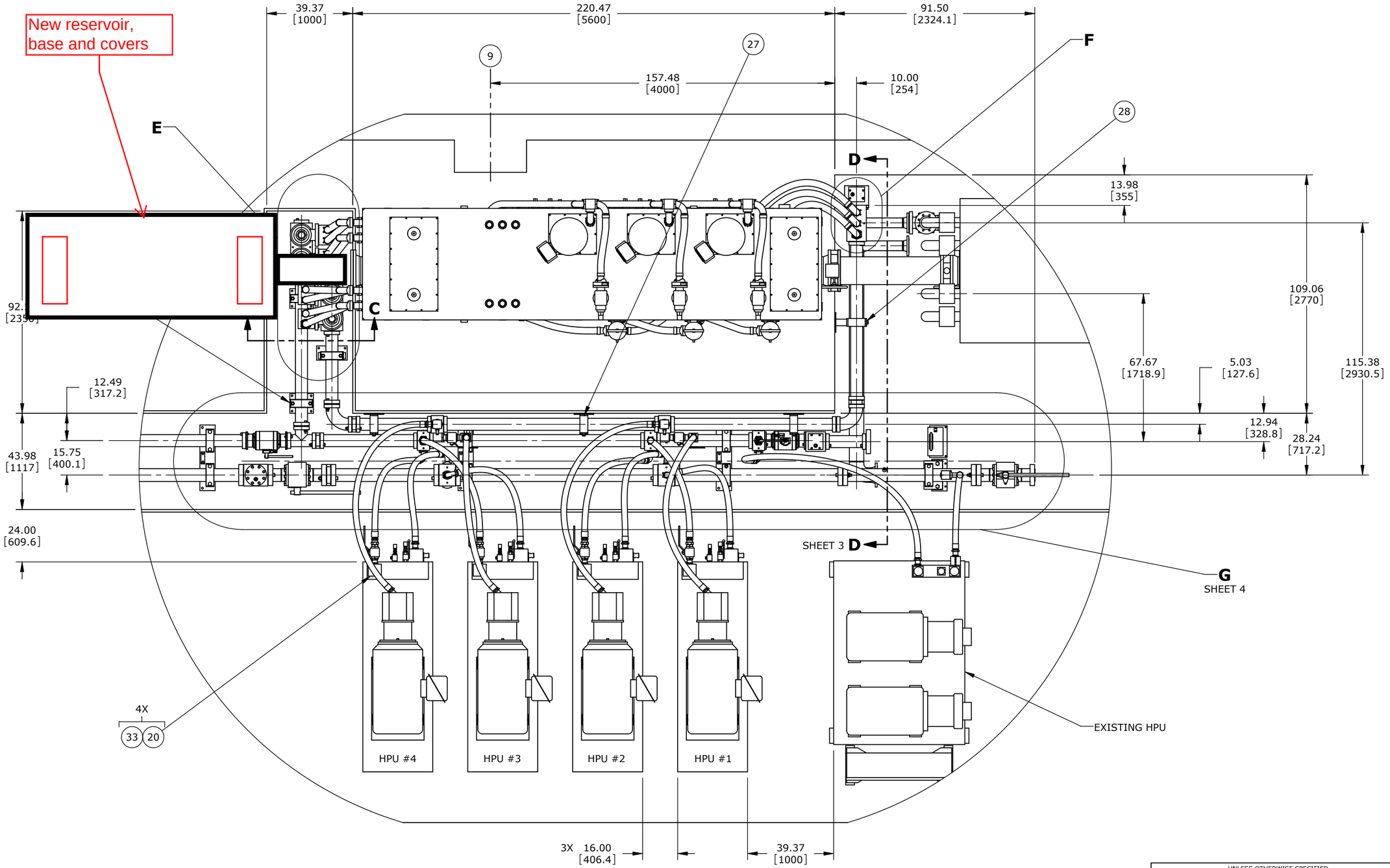

DETAIL A
SCALE 2 : 45

REVISIONS

DESCRIPTION			LETTER	ECN NO
DRAWN	ENGR	DATE		

-

SOURCE/REF DRAWING -

PROPRIETARY DATA

THE INFORMATION AND DESIGN(S) DISCLOSED HEREIN ARE CONFIDENTIAL AND THE PROPERTY OF MTS SYSTEMS CORPORATION AND MAY NOT BE USED, REPRODUCED OR DISCLOSED IN ANY FORM EXCEPT AS GRANTED IN WRITING BY MTS SYSTEMS CORPORATION. THIS RESTRICTION EXCLUDES INFORMATION THAT IS IN THE PUBLIC DOMAIN OR WAS LEGITIMATELY IN THE PRIOR POSSESSION OF THE RECIPIENT.

UNLESS OTHERWISE SPECIFIED

MATERIAL DESCRIPTION -----
MATERIAL SIZE -----
FINISH ----- MASK

- THREAD DEPTHS ARE TO MIN FULL THDS
- DRILL DEPTHS ARE TO FULL DIA
- REMOVE BURRS AND SHARP EDGES
- DO NOT SCALE PRINT

SCALE NONE
MACHINED SURFACES 180√

.XXX HOLE SIZE TOLERANCE: 0.000 TO .750 +.010/-.002; OVER .750 TO 1.500 +.015/-.003

GENERAL TOLERANCES: ANGLE ±2°; X/Y ±1/4; .X ±.1; .XX ±.03; .XXX ±.010

THIRD ANGLE PROJ

MTS SYSTEMS CORPORATION
EDEN PRAIRIE, MINNESOTA U.S.A.

DRAWN	CHECK	ENGR	MFG
TLN	-	JHS	-
DATE 7-30-10	DATE -	DATE 7-30-10	DATE -

TITLE
HYDRAULIC DISTR ASSY-US2.41493.CUS

NEXT LEVEL ----- | SIZE D | NUMBER 100-230-522 | REV A
PRODUCT CODE -----
SHEET 2 OF 4

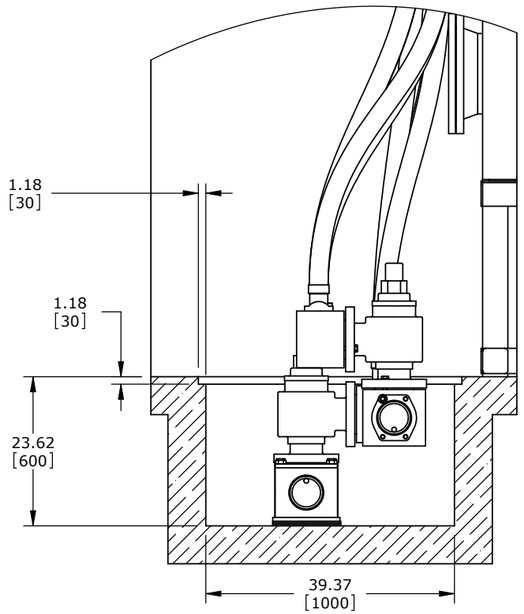

SECTION C-C
SCALE 1 : 12
(NEW TRENCH DETAIL)

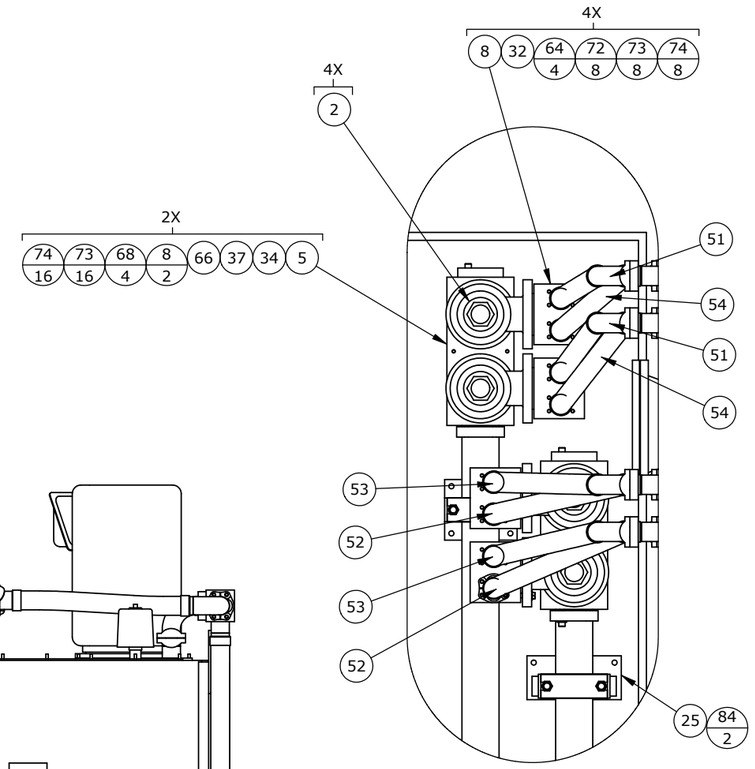

DETAIL E
SCALE 4 : 45

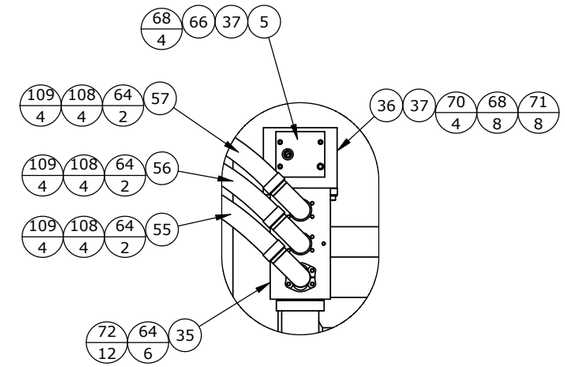

DETAIL F
SCALE 4 : 45

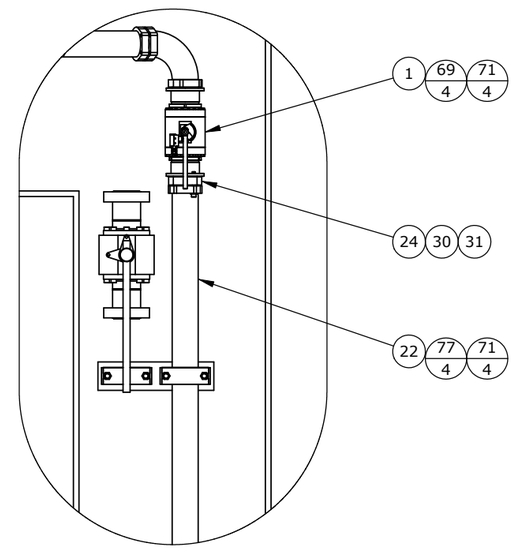

DETAIL B
SCALE 1 : 16

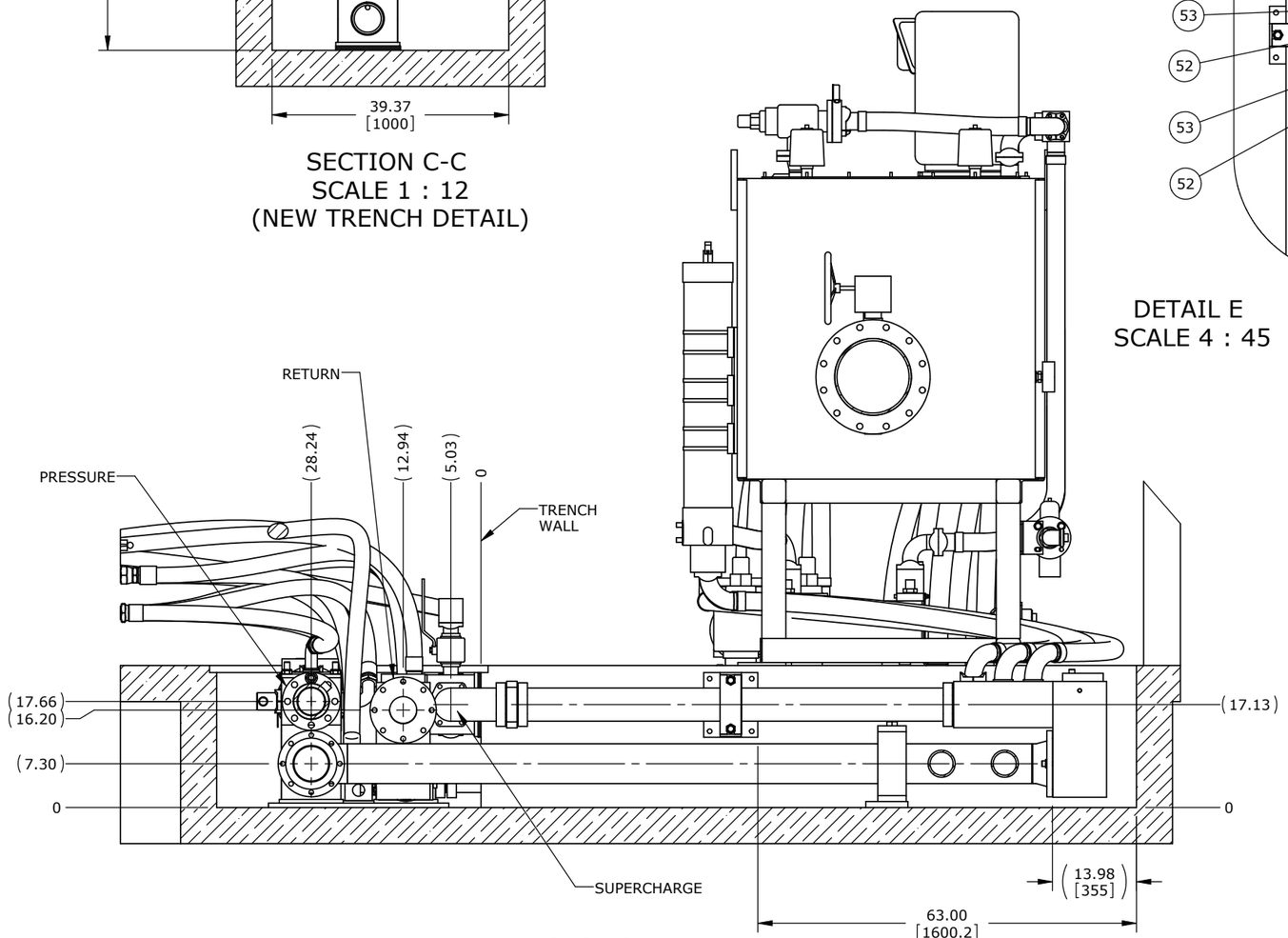

SECTION D-D
SCALE 1 : 12

REVISIONS

DESCRIPTION			LETTER	ECN NO
DRAWN	ENGR	DATE		

SOURCE/REF DRAWING -

PROPRIETARY DATA

THE INFORMATION AND DESIGN(S) DISCLOSED HEREIN ARE CONFIDENTIAL AND THE PROPERTY OF MTS SYSTEMS CORPORATION AND MAY NOT BE USED, REPRODUCED OR DISCLOSED IN ANY FORM EXCEPT AS GRANTED IN WRITING BY MTS SYSTEMS CORPORATION. THIS RESTRICTION EXCLUDES INFORMATION THAT IS IN THE PUBLIC DOMAIN OR WAS LEGITIMATELY IN THE PRIOR POSSESSION OF THE RECIPIENT.

UNLESS OTHERWISE SPECIFIED

MATERIAL DESCRIPTION -----
MATERIAL SIZE -----
FINISH ----- MASK
- THREAD DEPTHS ARE TO MIN FULL THDS
- DRILL DEPTHS ARE TO FULL DIA
- REMOVE BURRS AND SHARP EDGES
- DO NOT SCALE PRINT

SCALE NONE
MACHINED SURFACES 180✓

.XXX HOLE SIZE TOLERANCE: 0.000 TO .750 +.010/-.002; OVER .750 TO 1.500 +.015/-.003

GENERAL TOLERANCES: ANGLE ±2°; X/Y ±1/4; .X ±.1; .XX ±.03; .XXX ±.010

THIRD ANGLE PROJ

DRAWN	CHECK	ENGR	MFG
TLN	-	JHS	-
DATE 7-30-10	DATE -	DATE 7-30-10	DATE -

TITLE
HYDRAULIC DISTR
ASSY-US2.41493.CUS

NEXT LEVEL -----
PRODUCT CODE -----
SIZE D
NUMBER 100-230-522
REV A
SHEET 3 OF 4

MTS SYSTEMS CORPORATION
EDEN PRAIRIE, MINNESOTA U.S.A.

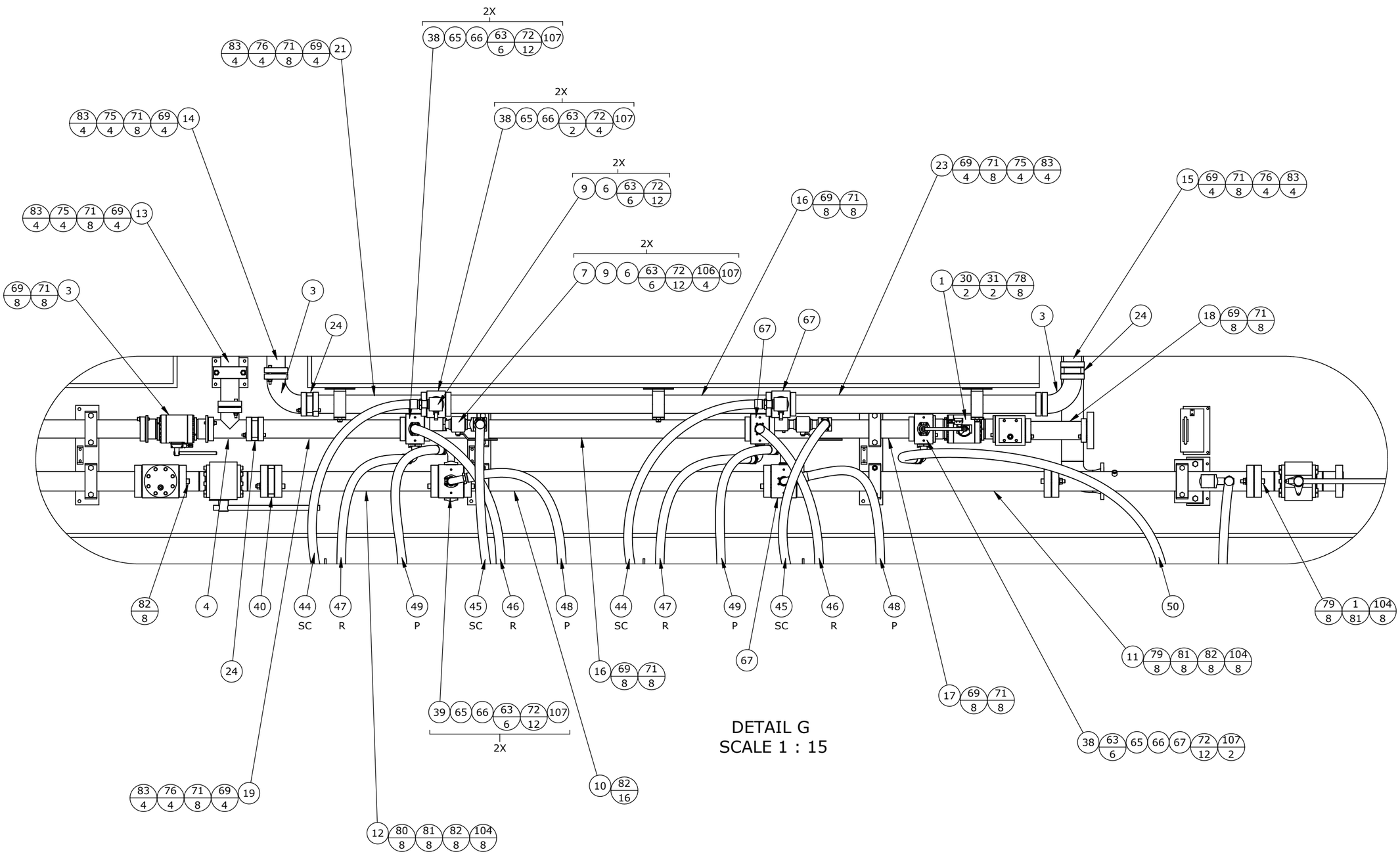

DETAIL G
SCALE 1 : 15

REVISIONS				
DESCRIPTION			LETTER	ECN NO
DRAWN	ENGR	DATE		

-

SOURCE/REF DRAWING -

PROPRIETARY DATA

THE INFORMATION AND DESIGN(S) DISCLOSED HEREIN ARE CONFIDENTIAL AND THE PROPERTY OF MTS SYSTEMS CORPORATION AND MAY NOT BE USED, REPRODUCED OR DISCLOSED IN ANY FORM EXCEPT AS GRANTED IN WRITING BY MTS SYSTEMS CORPORATION. THIS RESTRICTION EXCLUDES INFORMATION THAT IS IN THE PUBLIC DOMAIN OR WAS LEGITIMATELY IN THE PRIOR POSSESSION OF THE RECIPIENT.

UNLESS OTHERWISE SPECIFIED

MATERIAL DESCRIPTION -----

MATERIAL SIZE -----

FINISH ----- MASK

- THREAD DEPTHS ARE TO MIN FULL THDS
- DRILL DEPTHS ARE TO FULL DIA
- REMOVE BURRS AND SHARP EDGES
- DO NOT SCALE PRINT

SCALE NONE

MACHINED SURFACES 180√

.XXX HOLE SIZE TOLERANCE: 0.000 TO .750 +.010/-.002; OVER .750 TO 1.500 +.015/-.003

GENERAL TOLERANCES: ANGLE ±2°; X/Y ±1/4; .X ±.1; .XX ±.03; .XXX ±.010

THIRD ANGLE PROJ

DRAWN	CHECK	ENGR	MFG
TLN	-	JHS	-
DATE 7-30-10	DATE -	DATE 7-30-10	DATE -

TITLE
HYDRAULIC DISTR
ASSY-US2.41493.CUS

NEXT LEVEL -----

PRODUCT CODE -----

SIZE D

NUMBER 100-230-522

REV A

SHEET 4 OF 4

MTS SYSTEMS CORPORATION
EDEN PRAIRIE, MINNESOTA U.S.A.