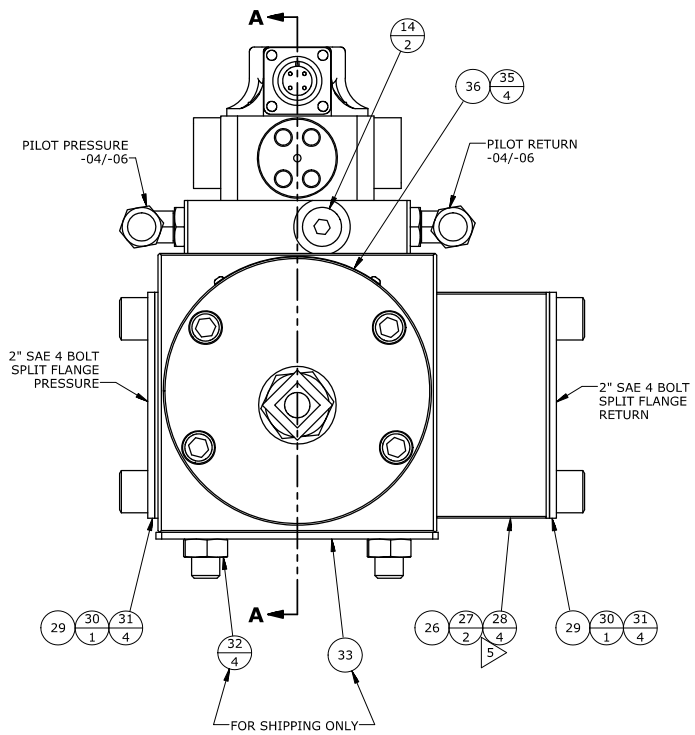

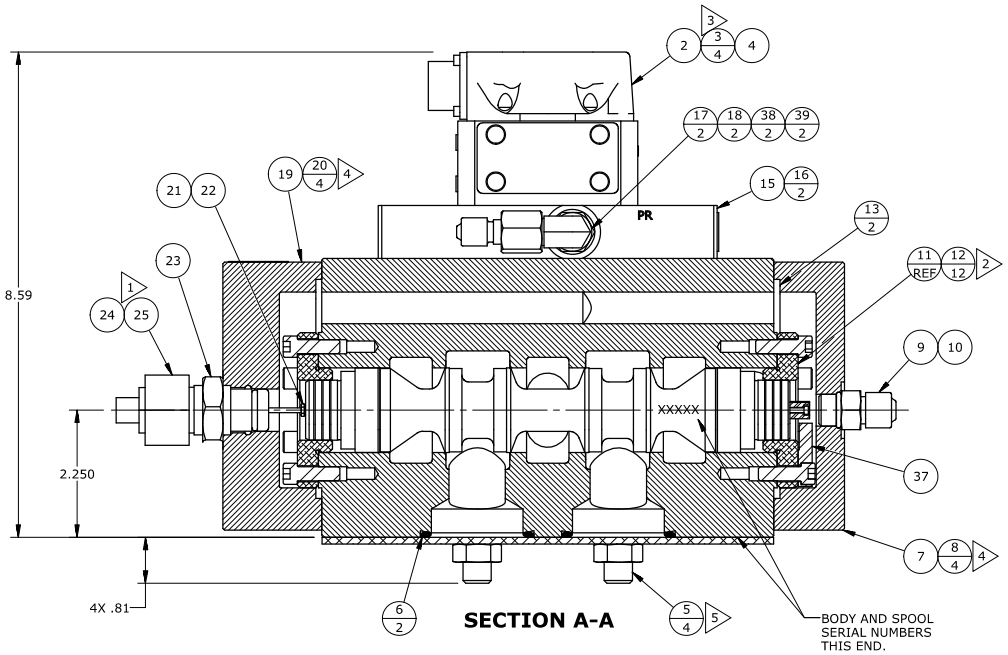

SECTION A-A

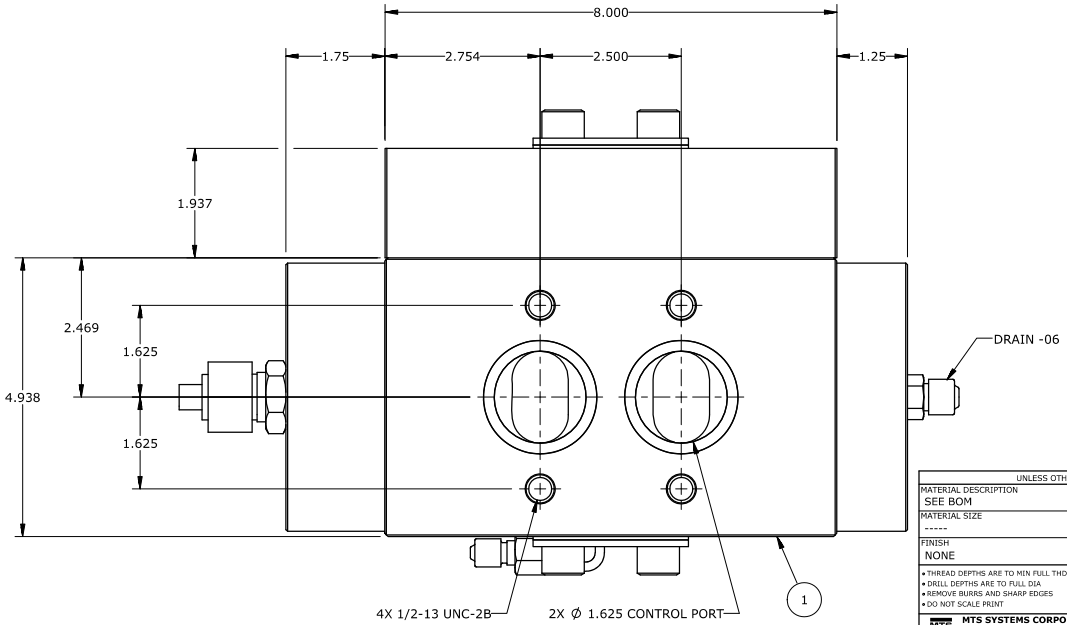

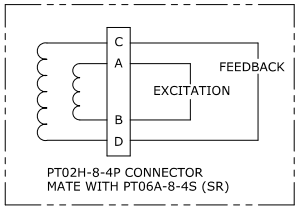

PT02H-8-4P CONNECTOR
MATE WITH PT06A-8-4S (SR)

NOTES:

1. WHEN INSTALLED, LVDT T.I.R. AT TIP SHOULD BE LESS THAN .003.
2. LUBE AND TORQUE 1/4-20 TO 9.4 LB-FT [13 N-m].
3. LUBE AND TORQUE 5/16-18 TO 19 LB-FT [26 N-m].
4. LUBE AND TORQUE 3/8-16 TO 34 LB-FT [47 N-m].
5. LUBE AND TORQUE 1/2-13 TO 84 LB-FT [110 N-m].
6. SEE SHEET 2 FOR LVDT ORIENTATION.

REVISIONS

DESCRIPTION	DRAWN	ENGR	DATE	LETTER	ECN NO
REDRAWN IN SOLIDWORKS. -01, -02, -03, -14, -15 TO REV D. -04 TO REV N. -10, -18 TO REV E. -19 THRU -26 TO REV C. -27, -28, -29 AND -30 TO REV A. -XX TO REV N.	CDB	BJA	08-06-15	N	S0003543 9
ADDED -31,-32 TO REV A -XX TO REV P	RWR	BJA	9-2-15	P	S0003637

SOURCE/REF DRAWING -

PROPRIETARY DATA

THE INFORMATION AND DESIGN(S) DISCLOSED HEREIN ARE CONFIDENTIAL AND THE PROPERTY OF MTS SYSTEMS CORPORATION AND MAY NOT BE USED, REPRODUCED OR DISCLOSED IN ANY FORM EXCEPT AS GRANTED IN WRITING BY MTS SYSTEMS CORPORATION. THIS RESTRICTION EXCLUDES INFORMATION THAT IS IN THE PUBLIC DOMAIN OR WAS LEGITIMATELY IN THE PRIOR POSSESSION OF THE RECIPIENT.

UNLESS OTHERWISE SPECIFIED

MATERIAL DESCRIPTION: SEE BOM
MATERIAL SIZE: -----
FINISH: NONE
MASK
• THREAD DEPTHS ARE TO MIN FULL THDS
• DRILL DEPTHS ARE TO FULL DIA
• REMOVE BURRS AND SHARP EDGES
• DO NOT SCALE PRINT
SCALE: NONE
MACHINED SURFACES 180√

.XXX HOLE SIZE TOLERANCE: 0.000 TO .750 +.010/-.002; OVER .750 TO 1.500 +.015/-.003

GENERAL TOLERANCES: ANGLE ±2°; X/Y ±1/4; .X ±.1; .XX ±.03; .XXX ±.010

THIRD ANGLE PROJ

	DRAWN	CHECK	ENGR	MFG
	JD	-	HSC	-
DATE	08-06-96	-	11-96	-

TITLE: SERVOVALVE ASSY-250GPM

NEXT LEVEL: -----
PRODUCT CODE: 256.25X
SIZE: D
NUMBER: 335610-XX
REV: P
SHEET 1 OF 2

MTS SYSTEMS CORPORATION
EDEN PRAIRIE, MINNESOTA U.S.A.

PART NUMBER	REV	MODEL NUMBER	PILOT VALVE	SEAL MATERIAL	APPROVAL	DATE	NOTES
335610-01	D	256.25A-01	252.21, 1 GPM	BUNA -N	WRA	9-78	
335610-02	D	256.25A-02	252.22, 2.5 GPM	BUNA -N	WRA	9-78	
335610-03	D	256.25A-05	252.23, 5 GPM	BUNA -N	WRA	9-78	
335610-04	N	256.25A-00	NONE	BUNA -N	WRA	9-78	
335610-05	-	256.25A-01	252.21, 1 GPM	VITON	WRA	9-78	
335610-06	-	256.25A-02	252.22, 2.5 GPM	VITON	WRA	9-78	
335610-07	-	256.25A-05	252.23, 5 GPM	VITON	WRA	9-78	
335610-08	B	256.23S-00	NONE	BUNA -N	HSC	11-91	200 GPM
335610-09	B	256.23S-01	252.21, 1 GPM	BUNA -N	HSC	11-91	200 GPM
335610-10	E	256.2XS-00	NONE	BUNA -N	HSC	11-93	NYLON BRGS 220 GPM
335610-12	B	256.25B-02	252.42, 2.5 GPM	BUNA -N	HSC	11-92	
335610-14	D	256.25E-01	252.51, 1 GPM	BUNA -N	HSC	11-92	
335610-15	D	256.25E-02	252.52, 2.5 GPM	BUNA -N	HSC	11-92	
335610-16	B	256.25E-05	252.53, 5 GPM	BUNA -N	HSC	11-92	
335610-17	B	256.25S-00	NONE	BUNA -N	HSC	3-94	NYLON BRGS
335610-18	E	256.2XS-00	NONE	BUNA -N	HSC	5-95	NYLON BRGS 220 GPM
335610-19	C	256.25S-00	NONE	BUNA -N	HSC	1-97	.003 OVERLAP
335610-20	C	256.25S-05	252.23, 5 GPM	BUNA -N	KDS	2-97	.003 OVERLAP
335610-21	C	256.25A-005	252.13, 1/2 GPM	BUNA -N	JCG	9-02	
335610-24	C	256.25X-00	NONE	BUNA -N	HSC	7-04	4500 PSI
335610-25	C	256.25B-05	252.43, 5 GPM	BUNA -N	JFW	3-05	
335610-26	C	256.25A-.125	252.11G, 1/8 GPM	BUNA -N	BJA	12-08	
335610-27	A	256.25A-00	NONE	BUNA -N	BJA	7-15	90° LVDT ▷
335610-28	A	256.25A-01	252.21, 1 GPM	BUNA -N	BJA	7-15	90° LVDT ▷
335610-29	A	256.25A-00	NONE	BUNA -N	BJA	7-15	LVDT W/CABLE ▷
335610-30	A	256.25A-01	252.21, 1 GPM	BUNA -N	BJA	7-15	LVDT W/CABLE ▷
335610-31	A	256.25S-00	NONE	VITON	BJA	9-2-15	REPLACE ALL O-RINGS WITH ITEM 50 SEALS
335610-32	A	256.25S-05	252.43,5 GPM	VITON	BJA	9-2-15	

LVDT P/N	MFG	"A"	"B"
076482-01	COLLINS	1.53	1.78
333364-03	COLLINS	1.75	2.00
333364-03	KAVLICO	1.88	2.13

NOTES:

CUT THREADED END OF LVDT TO LENGTH SHOWN IN TABLE ABOVE

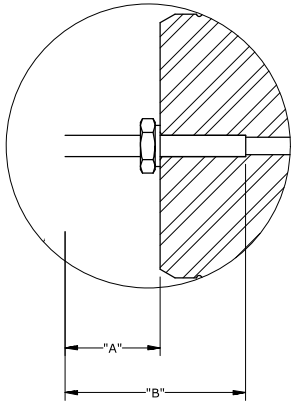

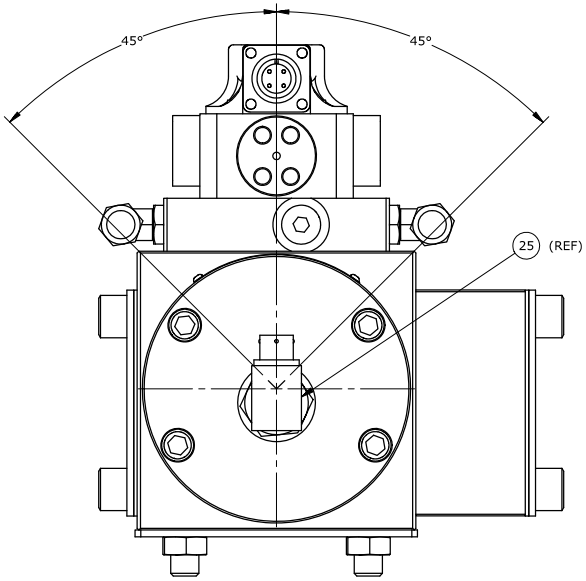

90° LVDT CONFIGURATION

ORIENT CONNECTOR NOMINALLY VERTICAL,
MAX ±45° FROM VERTICAL.

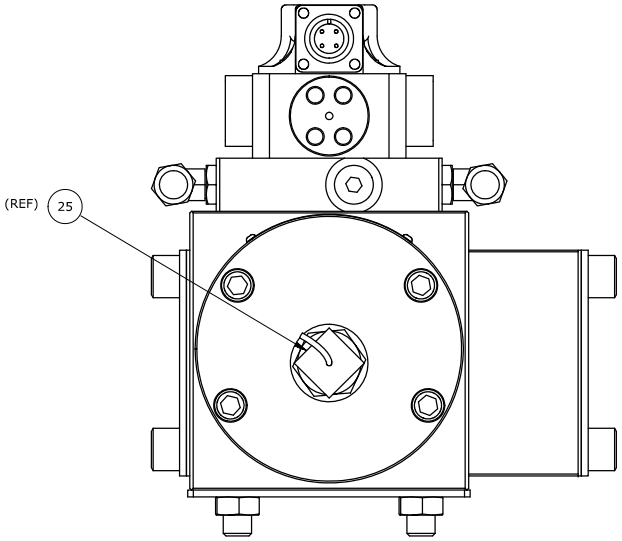

LVDT WITH CABLE CONFIGURATION

REVISIONS

DESCRIPTION			LETTER	ECN NO
DRAWN	ENGR	DATE		

SOURCE/REF DRAWING -

PROPRIETARY DATA

THE INFORMATION AND DESIGN(S) DISCLOSED HEREIN ARE CONFIDENTIAL AND THE PROPERTY OF MTS SYSTEMS CORPORATION AND MAY NOT BE USED, REPRODUCED OR DISCLOSED IN ANY FORM EXCEPT AS GRANTED IN WRITING BY MTS SYSTEMS CORPORATION. THIS RESTRICTION EXCLUDES INFORMATION THAT IS IN THE PUBLIC DOMAIN OR WAS LEGITIMATELY IN THE PRIOR POSSESSION OF THE RECIPIENT.

UNLESS OTHERWISE SPECIFIED

MATERIAL DESCRIPTION -----

MATERIAL SIZE -----

FINISH ----- MASK

- THREAD DEPTHS ARE TO MIN FULL THDS
- DRILL DEPTHS ARE TO FULL DIA
- REMOVE BURRS AND SHARP EDGES
- DO NOT SCALE PRINT

SCALE NONE

MACHINED SURFACES 180√

.XXX HOLE SIZE TOLERANCE: 0.000 TO .750 +.010/-.002; OVER .750 TO 1.500 +.015/-.003

GENERAL TOLERANCES: ANGLE ±2°; X/X ±1/4; .X ±.1; .XX ±.03; .XXX ±.010

THIRD ANGLE PROJ

MTS SYSTEMS CORPORATION
EDEN PRAIRIE, MINNESOTA U.S.A.

DRAWN	CHECK	ENGR	MFG
JD	-	HSC	-
DATE 08-06-96	DATE -	DATE 11-96	DATE -

TITLE SERVOVALVE ASSY-250GPM

NEXT LEVEL -----

PRODUCT CODE 256.25X

SIZE D

NUMBER 335610-XX

REV P

SHEET 2 OF 2