PART NO.	REV	LENGTH	APPVL	DATE
571445-01	B	10 FT	ARP	11/6/06
571445-02	B	15 FT	ARP	11/6/06
571445-03	B	20 FT	ARP	11/6/06
571445-04	B	25 FT	ARP	11/6/06
571445-05	B	30 FT	ARP	11/6/06
571445-06	B	35 FT	ARP	11/6/06
571445-07	B	40 FT	ARP	11/6/06
571445-08	B	45 FT	ARP	11/6/06
571445-09	B	50 FT	ARP	11/6/06
571445-10	C	75 FT	ARP	11/13/06
571445-11	B	100 FT	ARP	8/8/07
571445-12	B	250 FT	SLR	12/18/07
571445-13	B	275 FT	KJK	1/28/08
571445-14	B	65 FT	SLR	4/14/08
571445-15	A	120 FT	DIM	4/29/08
571445-16	A	85 FT	DIM	5/19/08
571445-17	A	150 FT	SLR	6/16/08
571445-18	A	175 FT	SLR	6/26/08
571445-19	A	135 FT	DIM	10/2/08
571445-20	A	60 FT	MRT	1-9-09
571445-21	A	70 FT	MRT	1-9-09
571445-22	A	200 FT	JAH	05-15-09
571445-23	A	225 FT	JAH	05-15-09
571445-24	A	165 FT	KJK	10-28-09
571445-25	A	55 FT	MRT	1-4-11
571445-26	A	300 FT	DIM	3-24-11
571445-27	A	350 FT	DIM	3-24-11
571445-28	A	110 FT	GSW	7-15-11
571445-29	A	125 FT	SLR	5-8-13
571445-30	A	90 FT	GAC	9-12-14
571445-31	A	330 FT	BLF	2-26-15

MAXIMUM CABLE LENGTH 350 FEET.

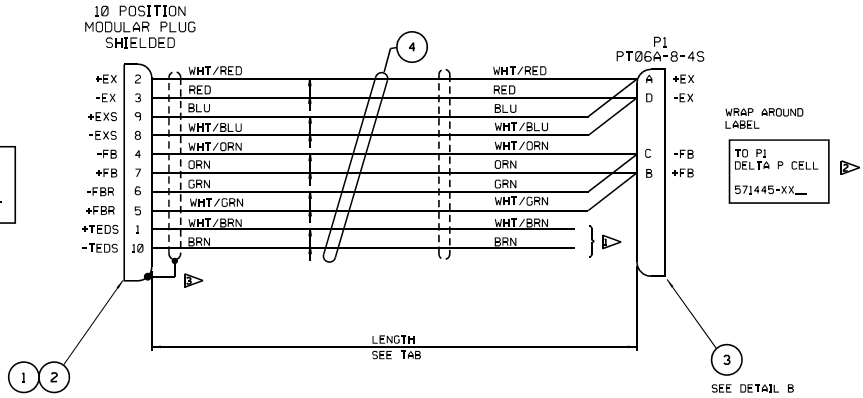

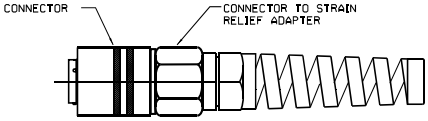

DETAIL A

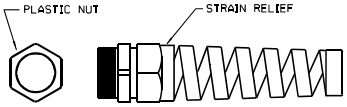

REMOVE THE PLASTIC NUT FROM STRAIN RELIEF
TO ALLOW MAXIMUM THREAD INSERTION
INTO THE STRAIN RELIEF ADAPTER.

DETAIL B

NOTES:

1. CUT OFF AND INSULATE UNUSED CONDUCTORS ON THIS END.
2. PART NUMBER INFORMATION TO INCLUDE SPECIFIC DASH NUMBER PER LENGTH AND CURRENT REVISION LEVEL.
3. FOLD OUTER BRAID SHIELD OVER OUTER JACKET. WHEN CRIMPING THE MODULAR PLUG, OUTER BRAID MUST MAKE CONTACT WITH THE MODULAR PLUG SHIELD AS SHOWN IN DETAIL A.

REVISIONS

DESCRIPTION			LTR	ECN NO.
DRAWN	CHKD	DATE		
-10 TO REV B 75 FT WAS 20 M			A	RULE 1
MRI	ARP	8/8/07		
ADDED MAX LENGTH. RJ50 DETAIL AND CHANGED NOTE 3 -01 THRU -09,-11,-12 -13,-14 TO REV B -10 TO REV C			B	RULE 1
MRI	ARP	4/21/08		
ADDED -29 REV A, -XX REV TO C. REMOVED "SEE TAB"			C	500801653
SML	SLR	5-8-13		
STRAIN RELIEF PROJECT ADDED DETAIL B XX TO REV D			D	500816547
MRI	ARP	12/12/13		
ADD -30, 90 FEET REV A XX TO REV E			E	500824985
MRI	ARP	9/12/14		
ADD -31, 330 FEET REV A XX TO REV F			F	500825954
SML	BLF	2-26-15		

SOURCE/REF DRAWING 570992-XX

PROPRIETARY DATA

The information and designs disclosed herein are the property of MTS Systems Corporation and may not be used, reproduced or disclosed in any form except as granted in writing by MTS Systems Corporation. This restriction excludes information that is in the public domain or was lawfully in the prior possession of the recipient.

UNLESS OTHERWISE SPECIFIED

MATERIAL DESCRIPTION

MATERIAL SIZE

FINISH

MASK

- THREAD DEPTHS ARE TO MIN FULL THDS
- DRILL DEPTHS ARE TO FULL DIA
- REMOVE BURRS AND SHARP EDGES
- DO NOT SCALE PRINT

SCALE NONE

MTS SYSTEMS CORPORATION
EDEN PRAIRIE, MINNESOTA U.S.A.

.XXX MOLE SIZE	TOLERANCE
0.000 TO .750	OVER .750 TO 1.500
±.001/-.002	±.001/-.003

ANGLE ±2°	
1/2	1/4
.X	±1
.XX	±0.03
.XXX	±0.01

TOLERANCE

MATERIAL SURFACES ±0.5

DRAWN MRI 8/6/06 | CHECK DATE | ENGR ARP 8/06 DATE | MFG DATE

TITLE CABLE ASSY-DELTA P CELL, RJ50 TO PT

NEXT LEVEL

PRODUCT CODE

SIZE D | NUMBER 571445-XX | REV F

SHEET 1 OF 1