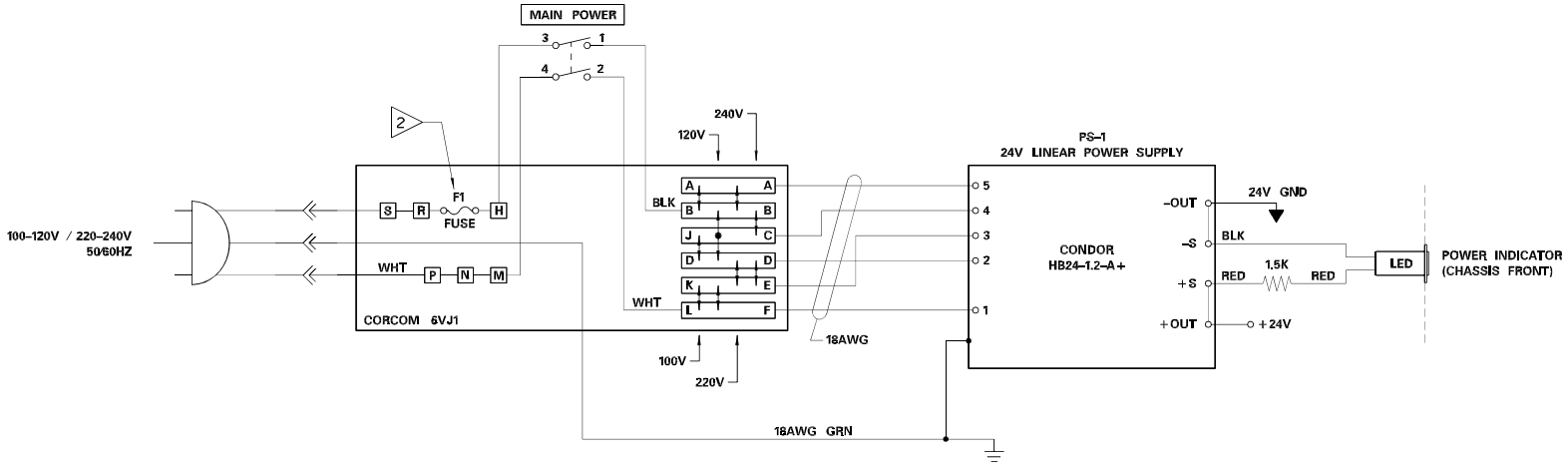

NOTES:

1. UNLESS OTHERWISE NOTED WIRE TO BE 22 GAUGE.

2. F1 = 1.5A @ 100-120V
   F1 = .75A @ 220-240V

REVISIONS

DESCRIPTION	DFTSMN	APPVL	DATE	LETTER	ECO NO.
DOCUMENTATION UPDATE	DCJ	RLL	11-1-99	B	RULE 1
DOCUMENTATION UPDATE	DCJ	RLL	8-1-00	C	RULE 1

SOURCE/REF.
DRAWING:

PROPRIETARY DATA
The information and design(s) disclosed herein are the property of MTS Systems Corporation and may not be used, reproduced or disclosed in any form except as granted in writing by MTS Systems Corporation. This restriction excludes information that is in the public domain or was legitimately in the prior possession of the recipient.

UNLESS OTHERWISE SPECIFIED

MATERIAL DESCRIPTION
MATERIAL SIZE
FINISH
MASK
SCALE NONE
MACHINED SURFACES 80
• THREAD DEPTHS ARE TO MIN. FULL THDS
• DRILL DEPTHS ARE TO FULL DIA.
• REMOVE BURRS AND SHARP EDGES
• DO NOT SCALE PRINT

.XXX HOLE SIZE TOLERANCE: 0.000 TO .750 +.010/-.002; OVER .750 TO 1.500 +.015/-.003

GENERAL TOLERANCES: ANGLE ±2°; 3/4 ±1/4; .X ±.1; .XX ±.03; .XXX ±.010

THIRD ANGLE PROJ.

MTS SYSTEMS CORPORATION
EDEN PRAIRIE, MINNESOTA U.S.A.

DRAWN	CHECK	ENGR	MFG
DCJ		RLL	
DATE 1-6-99	DATE	DATE 1-99	DATE

TITLE
WIRING DIAGRAM -
INPUT/OUTPUT JUNCTION BOX

NEXT LEVEL
PRODUCT CODE ASDPRJ
SIZE D
NUMBER 558342-01
REV C
SHEET 1 OF 3

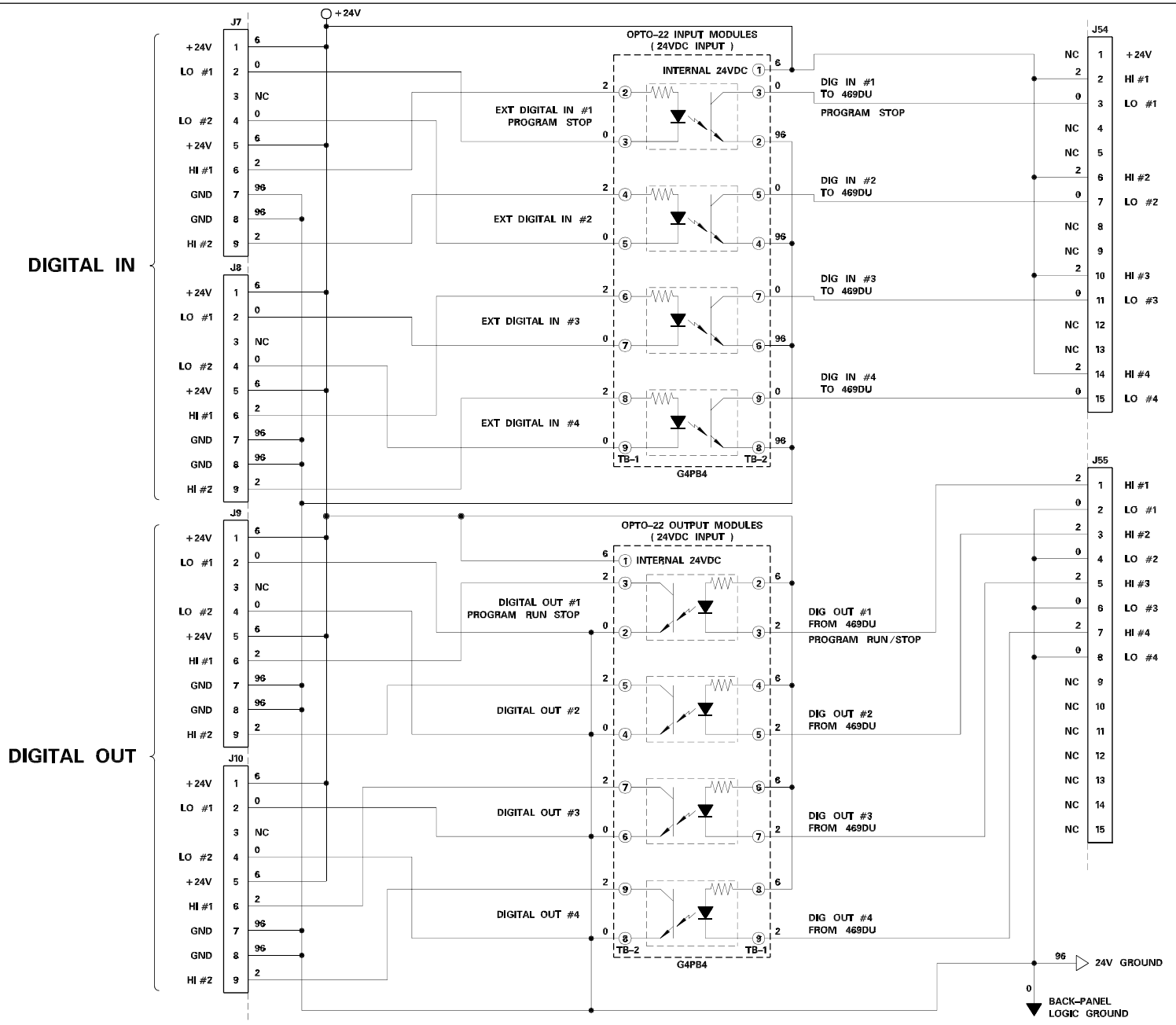

REVISIONS				
DESCRIPTION			LETTER	ECO NO.
DFTSMN	APPVL	DATE		
SEE SHEET 1				

SOURCE/REF.
DRAWING:

PROPRIETARY DATA

The information and design(s) disclosed herein are the property of MTS Systems Corporation and may not be used, reproduced or disclosed in any form except as granted in writing by MTS Systems Corporation. This restriction excludes information that is in the public domain or was legitimately in the prior possession of the recipient.

UNLESS OTHERWISE SPECIFIED

MATERIAL DESCRIPTION
MATERIAL SIZE
FINISH
MASK
SCALE NONE
MACHINED SURFACES 80 √
• THREAD DEPTHS ARE TO MIN. FULL THDS
• DRILL DEPTHS ARE TO FULL DIA.
• REMOVE BURRS AND SHARP EDGES
• DO NOT SCALE PRINT

.XXX HOLE SIZE TOLERANCE: 0.000 TO .750 +.010/-.002; OVER .750 TO 1.500 +.015/-.003

GENERAL TOLERANCES: ANGLE ±2°; X/X ±1/4; .X ±.1; .XX ±.03; .XXX ±.010

THIRD ANGLE PROJ.

DRAWN	CHECK	ENGR	MFG
DCJ		RLL	
DATE 1-6-99	DATE	DATE 1-99	DATE

TITLE
WIRING DIAGRAM -
INPUT/OUTPUT JUNCTION BOX

NEXT LEVEL | SIZE D | NUMBER 558342-01 | REV C

PRODUCT CODE ASDPRJ

SHEET 2 OF 3

MTS SYSTEMS CORPORATION
EDEN PRAIRIE, MINNESOTA U.S.A.

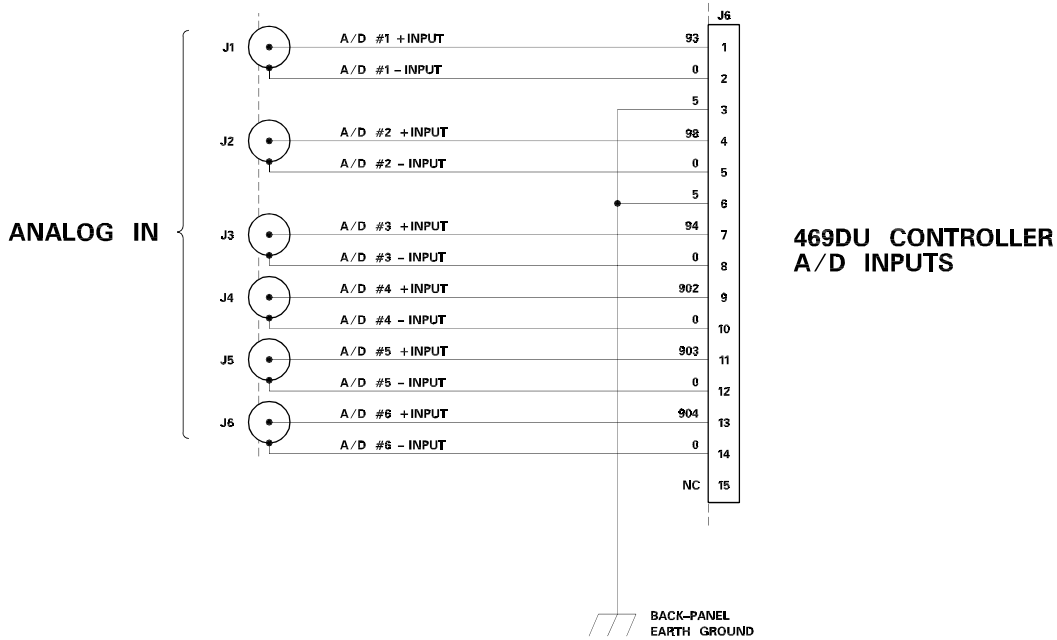

REVISIONS				
DESCRIPTION			LETTER	ECO NO.
DFTSMN	APPVL	DATE		
SEE SHEET 1				

SOURCE/REF.
DRAWING:

PROPRIETARY DATA
The information and design(s) disclosed herein are the property of MTS Systems Corporation and may not be used, reproduced or disclosed in any form except as granted in writing by MTS Systems Corporation. This restriction excludes information that is in the public domain or was legitimately in the prior possession of the recipient.

UNLESS OTHERWISE SPECIFIED

MATERIAL DESCRIPTION
MATERIAL SIZE
FINISH — MASK
• THREAD DEPTHS ARE TO MIN. FULL THDS
• DRILL DEPTHS ARE TO FULL DIA.
• REMOVE BURRS AND SHARP EDGES
• DO NOT SCALE PRINT
SCALE: NONE
MACHINED SURFACES 80 √

.XXX HOLE SIZE TOLERANCE: 0.000 TO .750 +.010/-.002; OVER .750 TO 1.500 +.015/-.003

GENERAL TOLERANCES: ANGLE ±2°; 3/1 ±1/4; .X ±.1; .XX ±.03; .XXX ±.010

THIRD ANGLE PROJ.

MTS SYSTEMS CORPORATION
EDEN PRAIRIE, MINNESOTA U.S.A.

DRAWN	CHECK	ENGR	MFG
DCJ		RLL	
DATE 1-6-99	DATE	DATE 1-99	DATE

TITLE: WIRING DIAGRAM - INPUT/OUTPUT JUNCTION BOX

NEXT LEVEL | SIZE D | NUMBER 558342-01 | REV C

PRODUCT CODE: ASDPRJ

SHEET 3 OF 3